ART. 4/20A40
WELDON SHANK TOOL HOLDER

DIN 69871/A, BALANCED CHUCK BODY, FOR MILLING CUTTERS (WELDON) ACCORDING TO DIN 1835 B AND DIN 6535 HB. SUPPLIED WITH TIGHTENING..

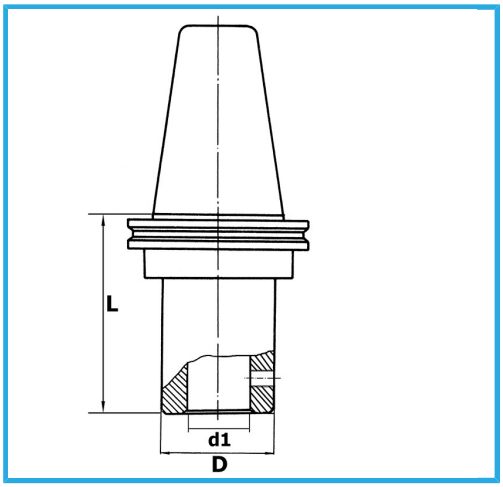

ISO	40
d1 - h6	20 mm
D	52 mm
L	63 mm
Gross weight	1,48 kg
EAN Code	8012667195830

Box

Grounded

18NiCrMo5 -