ART. F302/040
FACE MILLING CUTTER

WITH SLEEVE CONNECTION.

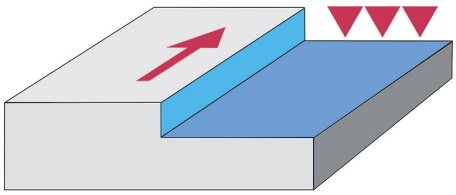

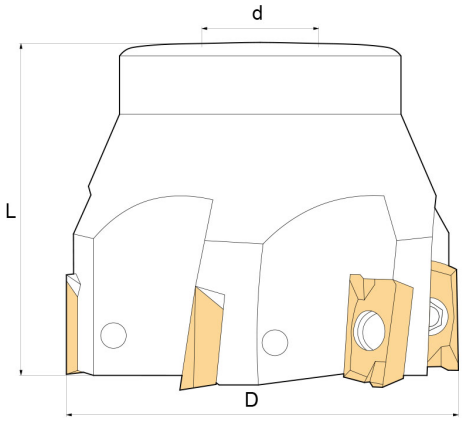

D	40 mm
L	40 mm
d	16 mm
Z	4
Screw	KV400
Insert (not included)	APKT1604...
Gross weight	0,22 kg
EAN Code	8012667180973

Box

Satin

Nickel plated

External