ART. 16IR14W134
INTERNAL THREAD INSERTS

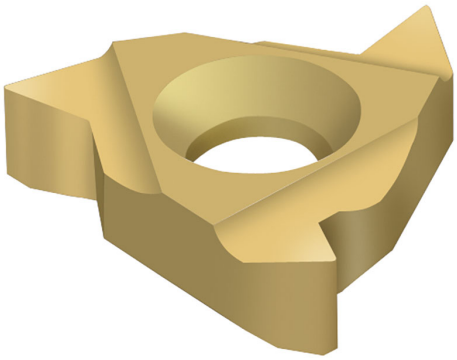

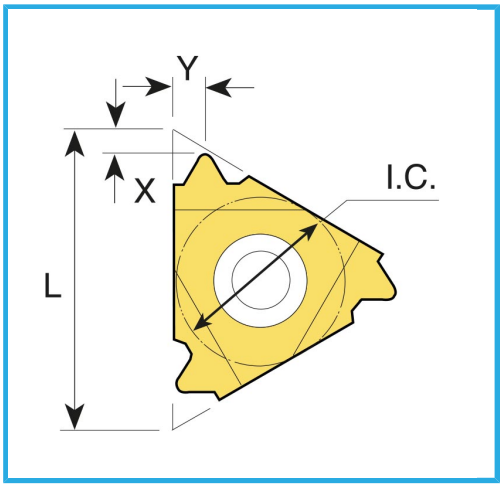

Thread	Whitwort 14 TPI
Pack	10
Gross weight	0,06 kg
EAN Code	8012667257026

Box